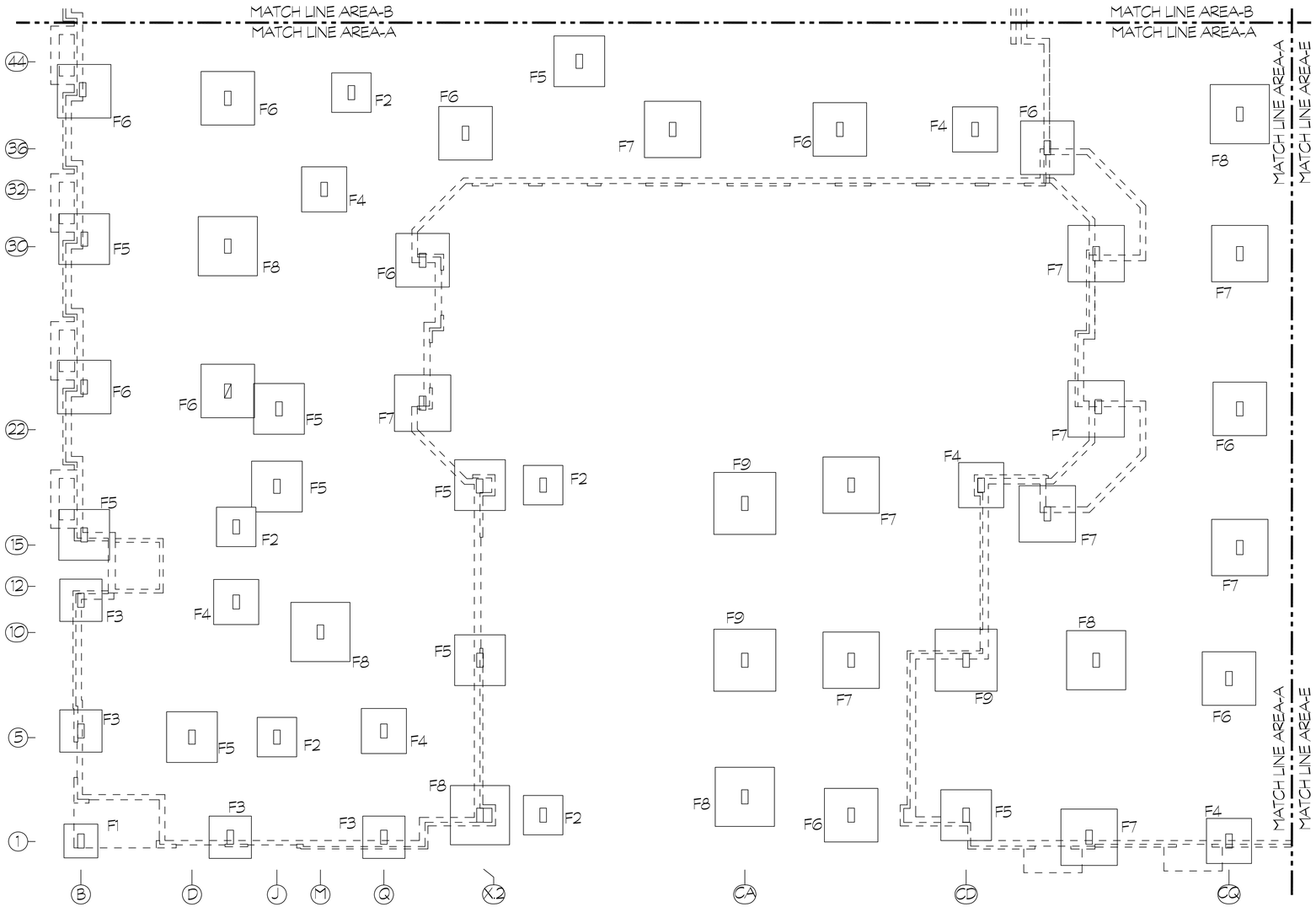

COLUMN FOOTING REINF. DETAILS

SDR S201A

NORTH

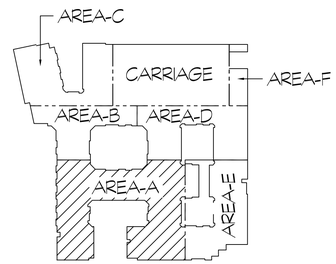

KEY PLAN

SDR A003

NORTH

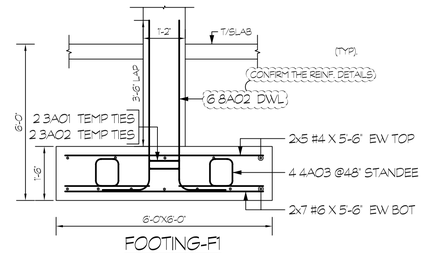

FOOTING-F1

SDR S201A

(1 -PLACE)

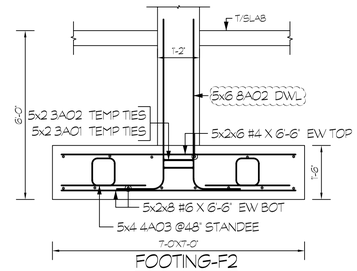

FOOTING-F2

SDR S201A

(5- PLACES)

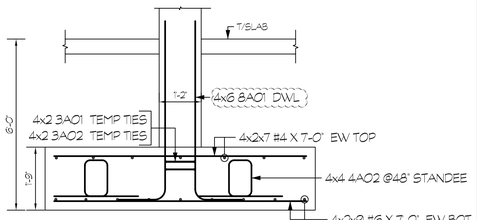

FOOTING-F3

SDR S201A

(4 -PLACES)

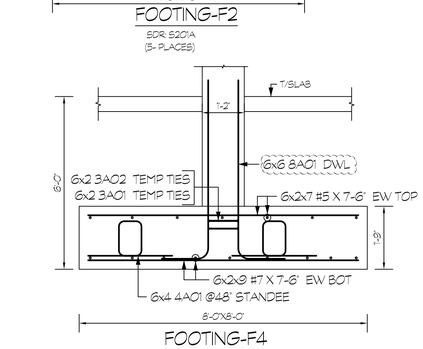

FOOTING-F4

SDR S201A

(6-PLACES)

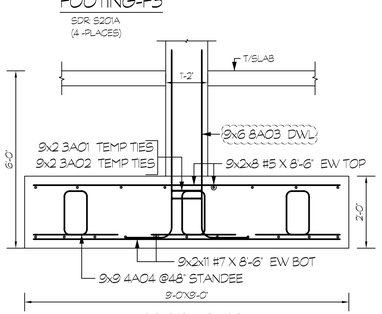

FOOTING-F5

SDR S201A

(9-PLACES)

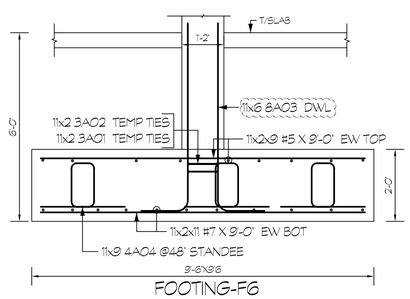

FOOTING-F6

SDR S201A

(11-PLACES)

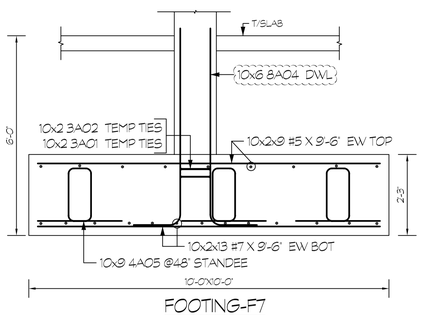

FOOTING-F7

SDR S201A

(10 -PLACES)

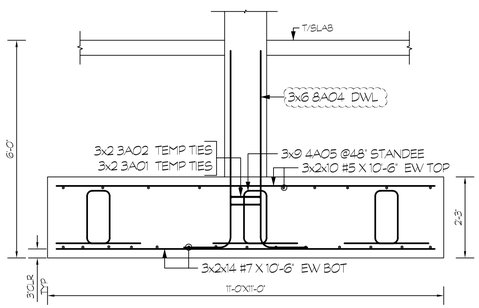

FOOTING-F9

SDR S201A

(3- PLACES)

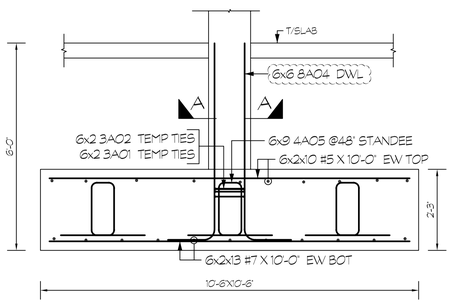

FOOTING-F8

SDR S201A

(6 -PLACES)

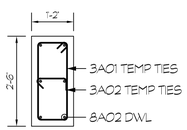

SECTION A

SDR S501

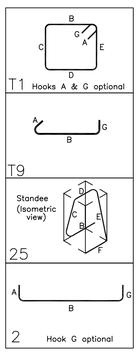

Release Number: R1.01																		
BAR LIST																		
Bar Mark	Qty	Size	Total Length	Type	'A'	'B'	'C'	'D'	'E'	'F'	'G'	'H'	'J'	'K'	'O'	'R'		
3A01	110	#3	6'-8"	T1	0'-4"	0'-10"	2'-2"	0'-10"	2'-2"		0'-4"							
3A02	110	#3	1'-6"	T9	0'-4"	0'-10"					0'-4"							
4A01	24	#4	5'-8 X"	25		1'-6"	1'-0 X"	0'-8"	1'-0 X"	1'-6"		1'-0"		0'-6"				
4A02	16	#4	5'-9 X"	25		1'-6"	1'-0 X"	0'-8"	1'-0 X"	1'-6"		1'-0 X"		0'-6 X"				
4A03	24	#4	5'-3 X"	25		1'-6"	0'-9 X"	0'-8"	0'-9 X"	1'-6"		0'-9 X"		0'-4 X"				
4A04	180	#4	6'-2 X"	25		1'-6"	1'-3 X"	0'-8"	1'-3 X"	1'-6"		1'-3"		0'-7 X"				
4A05	171	#4	6'-9"	25		1'-6"	1'-6 X"	0'-8"	1'-6 X"	1'-6"		1'-6"		0'-9"				
8A01	60	#8	6'-4"	2	1'-4"	5'-0"												
8A02	36	#8	6'-1"	2	1'-4"	4'-9"												
8A03	120	#8	6'-7"	2	1'-4"	5'-3"												
8A04	114	#8	6'-10"	2	1'-4"	5'-6"												

SHEET NO.

R1.01

SUBMITTAL

0	FOR APPROVAL	11-08-13

FIELD NOTE

All drawings, specifications and bar placing schedules are the sole property of FABco, llc. Any dissemination or distribution of the aforementioned transmittals, other than to the intended recipient as stated on the cover sheet, is strictly prohibited. Drawings and details, including placing schedules, are suggested methods of placements. In accordance with the CRSI Manual of Standard Practice, Physical reinforcement to be verified and detailed by a certified engineer.

PROJECT INFORMATION

SAMPLE DRAWING